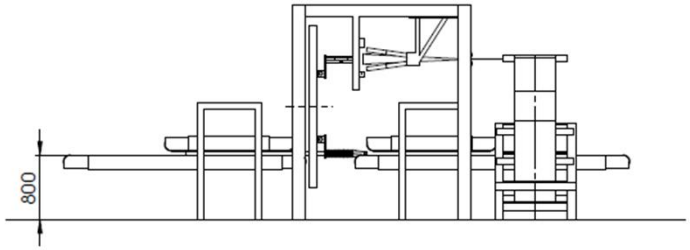

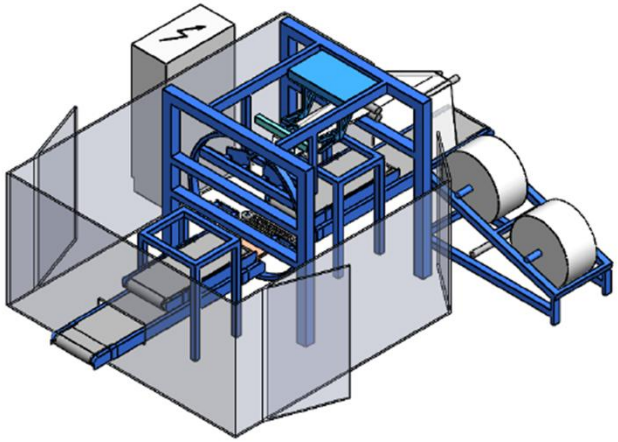

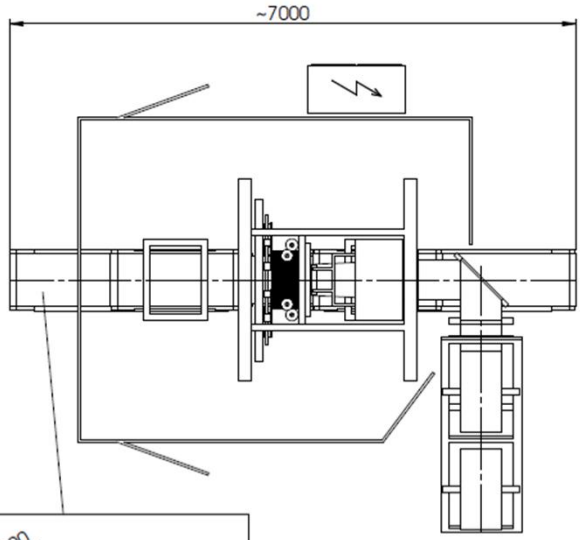

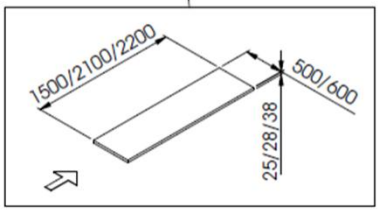

This drawing must neither be passed on to any person not authorized by us to receive it nor be copied or otherwise made use of by anybody without our permission

SoMAPP

Date	Correction
-	-
-	-
-	-
-	-

Date/init. 28.03.11 WJ | Scale: 1:50 | A3

One dimensional stretch
Low plates

Drawing no.
10900